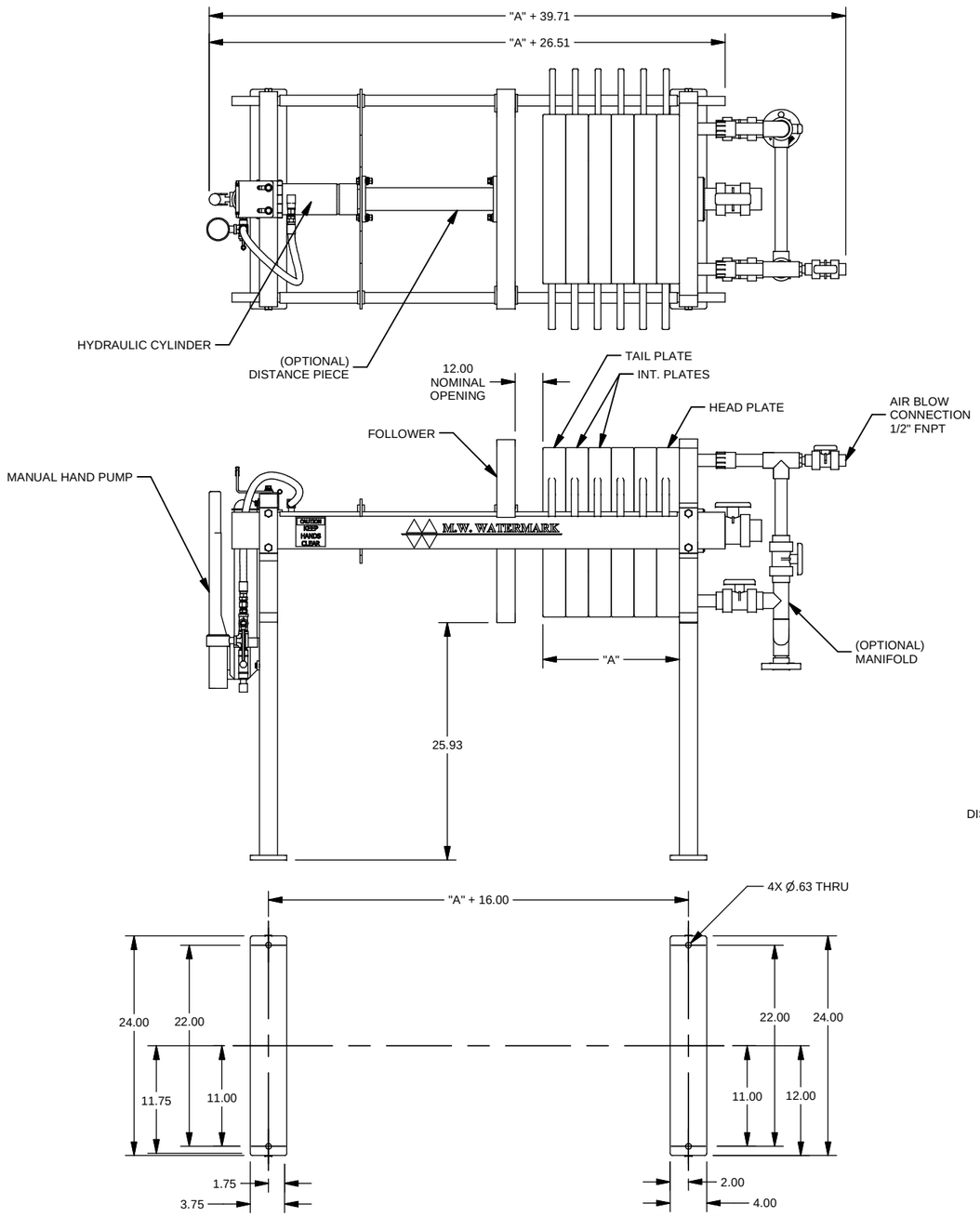

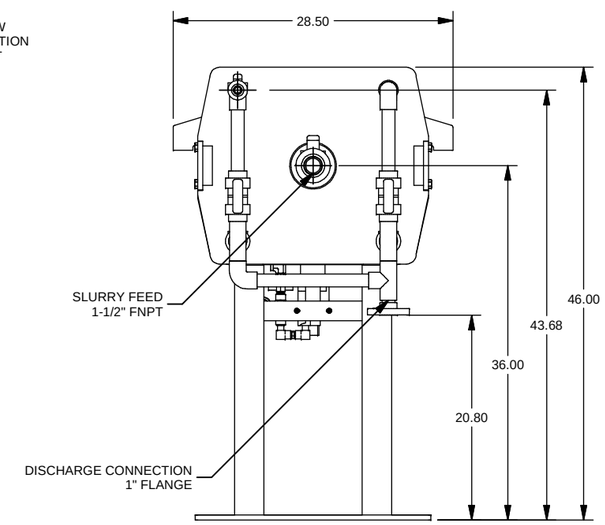

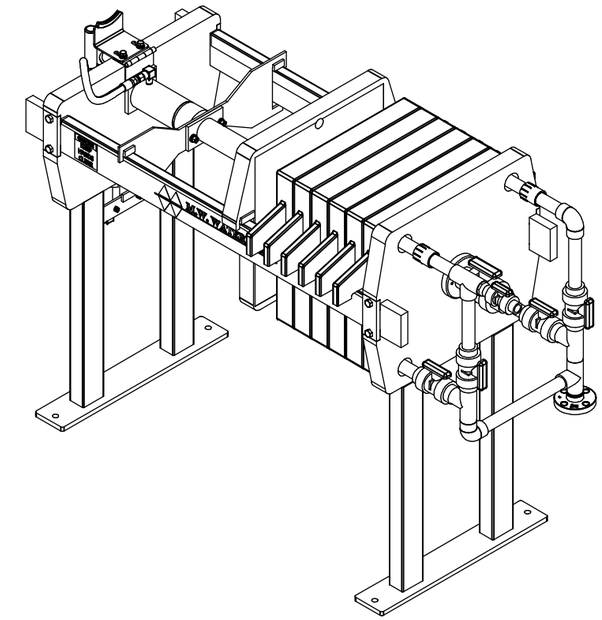

DRAWING FOR REFERENCE ONLY

THIRD ANGLE PROJECTION

ALL WELD SYMBOL SIZES ARE MINIMUM REQUIRED.
DIMENSIONS IN [mm] ARE MILLIMETERS.
DO NOT SCALE DRAWING.
DRAWN PER ASME Y14.5-2009

UNLESS OTHERWISE SPECIFIED
ALL DIMENSIONS ARE IN INCHES
AND TOLERANCES TO BE AS FOLLOWS.

FABRICATION	MACHINE
.XX ± .06	.XX ± .03
[X ± 2]	.XXX ± .005
< ± 2°	[X ± 1]
	[.X ± .1]
	< ± 1°

REV	DESCRIPTION	DATE	BY	ECN	REV	DESCRIPTION	DATE	BY	ECN

COMPANY CONFIDENTIAL
THIS DOCUMENT AND ALL INFORMATION CONTAINED HEREIN ARE THE PROPERTY OF MW WATERMARK AND/OR ITS AFFILIATES. THE DESIGN CONCEPTS AND INFORMATION CONTAINED HEREIN ARE PROPRIETARY TO MW WATERMARK AND ARE SUBMITTED IN CONFIDENCE. THEY ARE NOT TRANSFERABLE AND MUST BE USED ONLY FOR THE PURPOSE FOR WHICH THE DOCUMENT IS EXPRESSLY LOANED. THEY MUST NOT BE DISCLOSED, REPRODUCED, LOANED OR USED IN ANY OTHER MANNER WITHOUT THE EXPRESS WRITTEN CONSENT OF MW WATERMARK. IN NO EVENT SHALL THEY BE USED IN ANY MANNER DETRIMENTAL TO THE INTEREST OF MW WATERMARK. ALL PATENT RIGHTS ARE RESERVED. UPON THE DEMAND OF MW WATERMARK, THIS DOCUMENT, ALONG WITH ALL COPIES AND EXTRACTS, AND ALL RELATED NOTES AND ANALYSES, MUST BE RETURNED TO MW WATERMARK OR DESTROYED, AS INSTRUCTED BY MW WATERMARK. ACCEPTANCE OF THE DELIVERY OF THIS DOCUMENT CONSTITUTES AGREEMENT TO THESE TERMS AND CONDITIONS.

DWG BY: MRH	DATE: 11/17/2010	TITLE: DRAWING SPECIFICATIONS FOR FP470-M
CKD BY:	DATE:	CLIENT:
FILE: 40007946.idw		
SALES ORDER NUM:		M.W. WATERMARK L.L.C. www.mwwatermark.com
SCALE:		

SERIAL NUMBER	DRAWING NUMBER	SHEET	REV
	40007946	1 OF1	0